# Flow Physics of Diffused-Exit Film Cooling Holes Fed by an Internal Crossflow

John W. McClintic

Ph.D. Proposal

March 9, 2016

# Motivation and Objectives

Axial shaped film cooling holes fed by an internal crossflow is a common film cooling configuration in gas turbine engines and yet very little is understood about how internal flow affects their performance.

**The objectives of this study are as follows:**

1. Investigate the effect of various parameters to determine conditions of interest
2. Determine how internal crossflow causes biasing of coolant within the diffuser
3. Determine the extent of and study the mechanisms that cause ingestion into the film cooling hole
4. Study the nature and formation of vortical structures that affect the spread of coolant
5. Develop an understanding of how internal crossflow velocity and the injection rate contribute to the hole entrance effect

# Gas Turbine Film Cooling

# Active cooling is necessary for engine operation at high turbine inlet temperatures

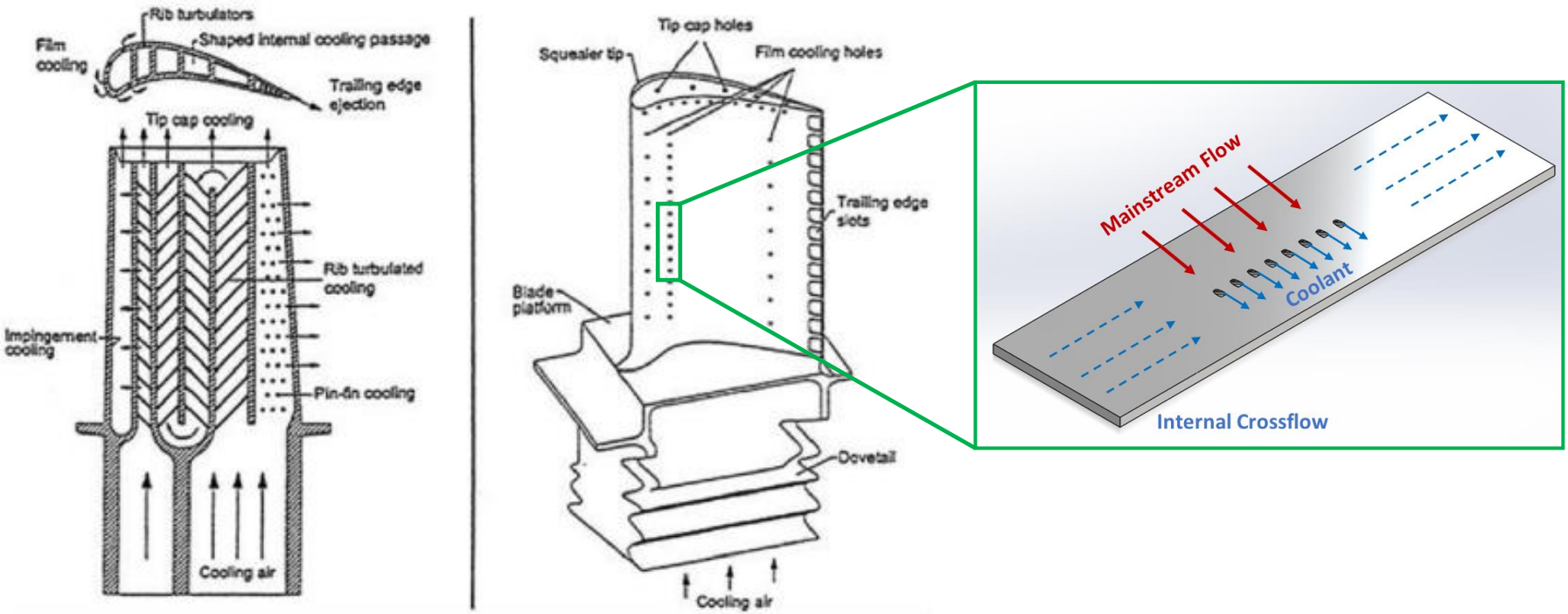


**Cooling schematic of a gas turbine blade – Han *et al* (2000)**

Cool air from the late compressor stages is supplied to the hot gas path components and is injected over the surface as film cooling

# Film cooling holes in engines are fed by internal flow, not a quiescent plenum

Turbine blade with internal crossflow

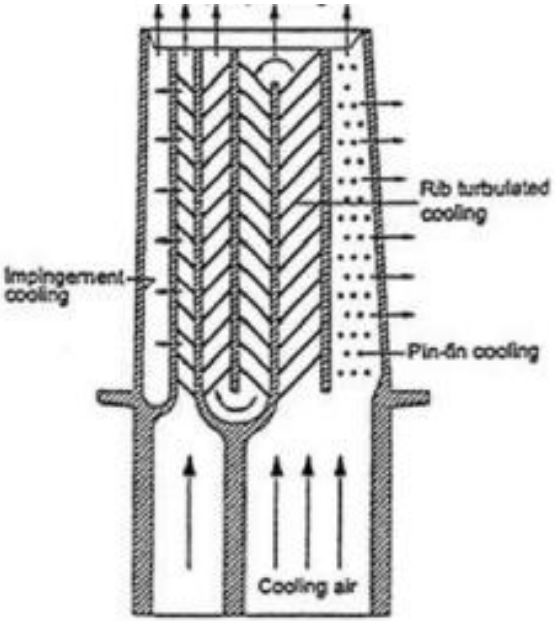


Turbine vane with internal coflow

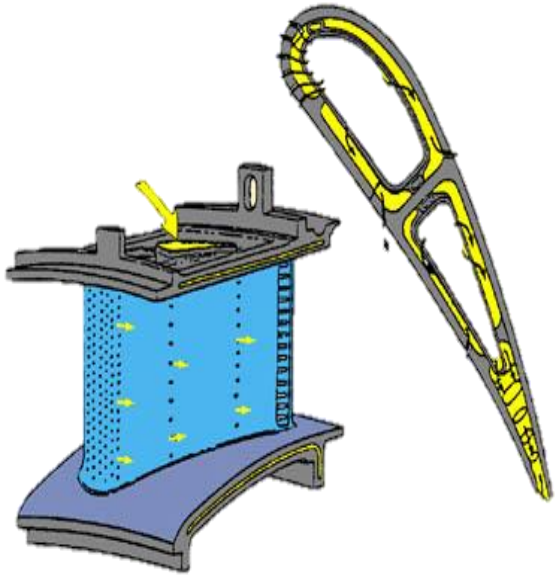

Plenum-fed experimental flat plate

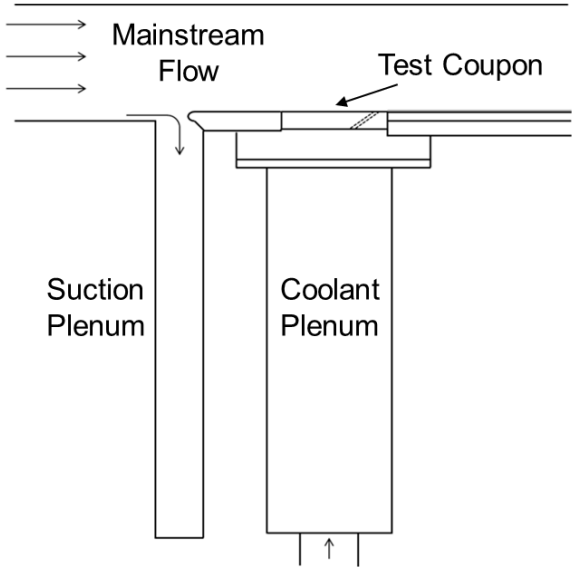


**Most film cooling experiments feed holes using a quiescent plenum**

# Internal crossflow tends to reduce the effectiveness of shaped film cooling holes

Internal crossflow causes a biasing of coolant flow in the diffuser

This biasing significantly reduces film cooling effectiveness, $\eta$

$$\eta \equiv \frac{T_\infty - T_{aw}}{T_\infty - T_c}$$

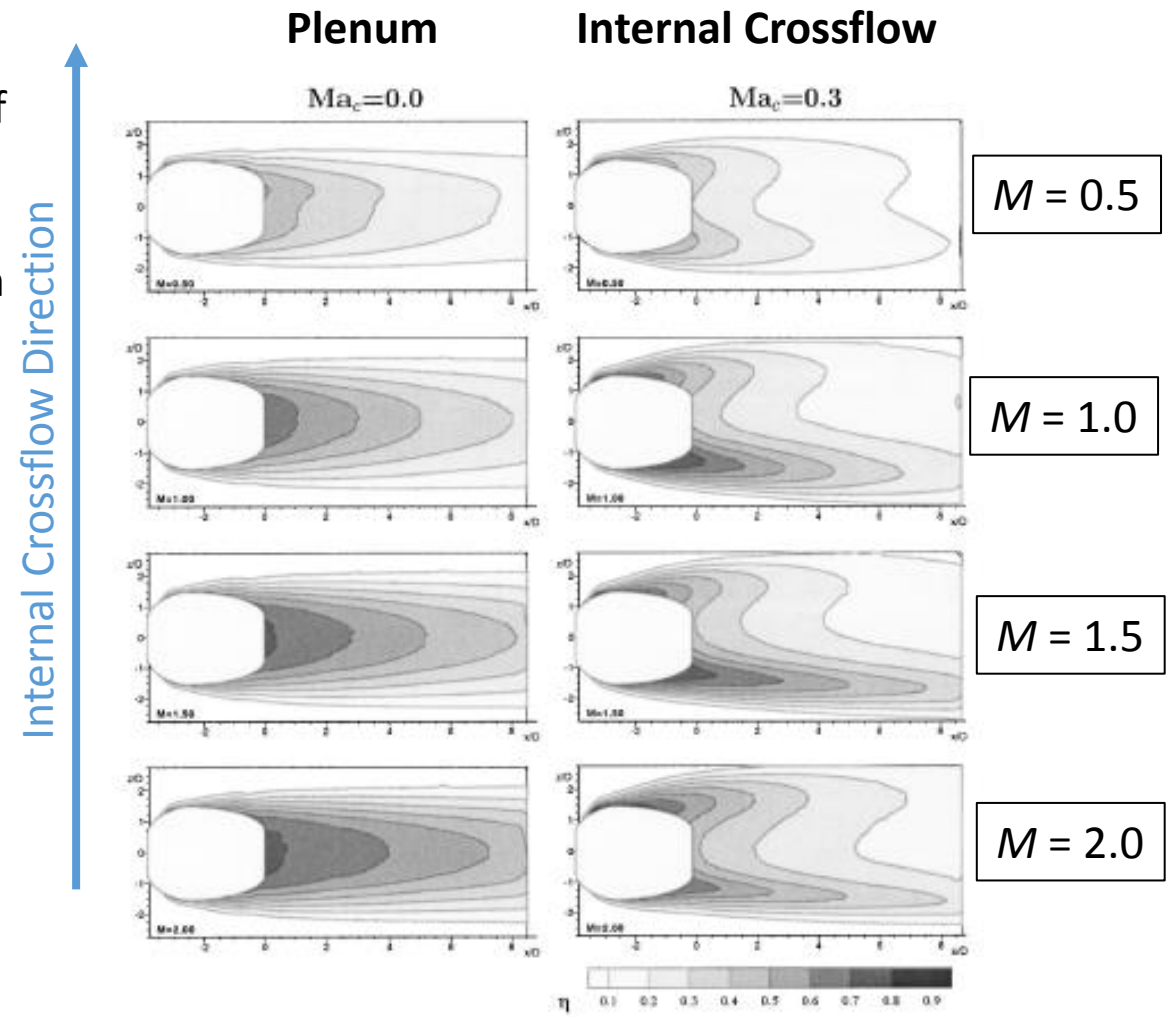




Figure is from Gritsch *et al* (2003)

# Important film cooling flow parameters

$$Re_d \equiv \frac{\rho_\infty U_\infty d}{\mu_\infty}$$

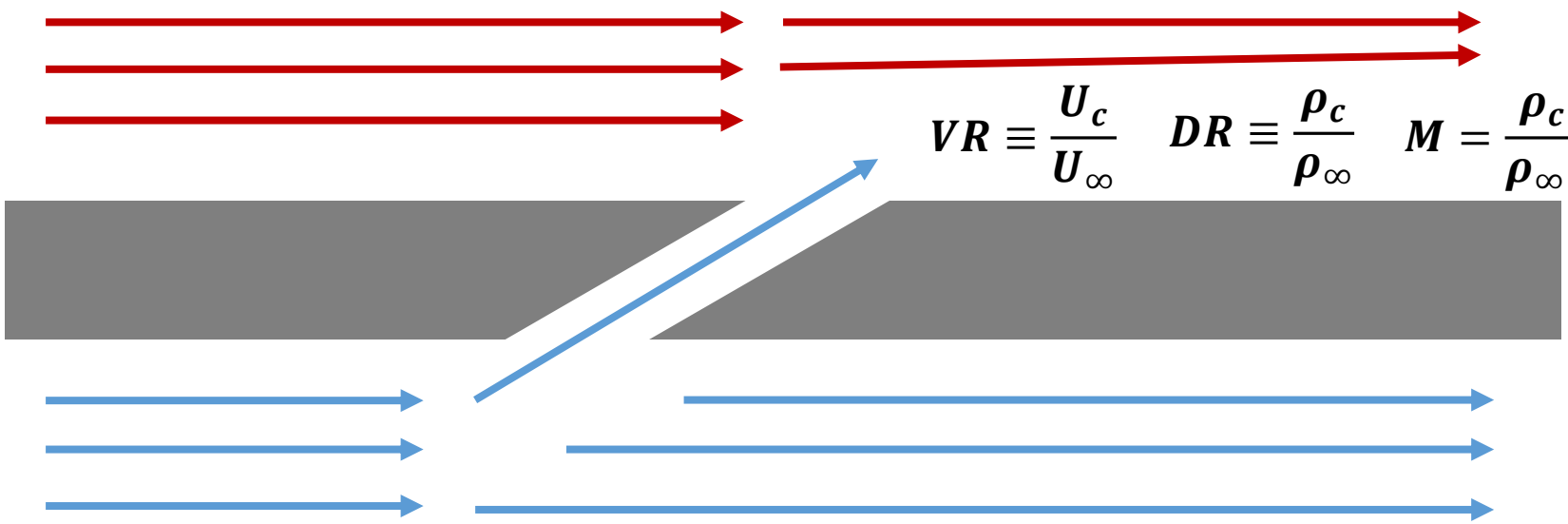

$$VR \equiv \frac{U_c}{U_\infty} \quad DR \equiv \frac{\rho_c}{\rho_\infty} \quad M = \frac{\rho_c U_c}{\rho_\infty U_\infty}$$

$$Re_{ch} \equiv \frac{\rho_{ch} U_{ch} d_{H,ch}}{\mu_{ch}} \quad VR_{ch} \equiv \frac{U_{ch}}{U_\infty}$$

**This is by no means a comprehensive list of parameters**

# Evaluation of turbine cooling effectiveness

**Overall Film Cooling Effectiveness**

$$\varphi = \frac{T_\infty - T_m}{T_\infty - T_c} = \frac{1-\eta}{1 + Bi + {h_f}/{h_i}} + \eta$$

**External Heat Transfer Boundary Conditions**

$$\eta \equiv \frac{T_\infty - T_{aw}}{T_\infty - T_c} \qquad HTA = \frac{h_f}{h_0}$$

**Conduction Through the Wall** $Bi = \frac{h_f t}{k}$

**Internal Heat Transfer Boundary Conditions**

$$Nu_i = \frac{h_i d_H}{k_i} \qquad T_c$$

*Base figure is from Bogard and Thole (2006)*

# Experimental Facility and Methods

# Low Speed Recirculating Wind Tunnel Facility

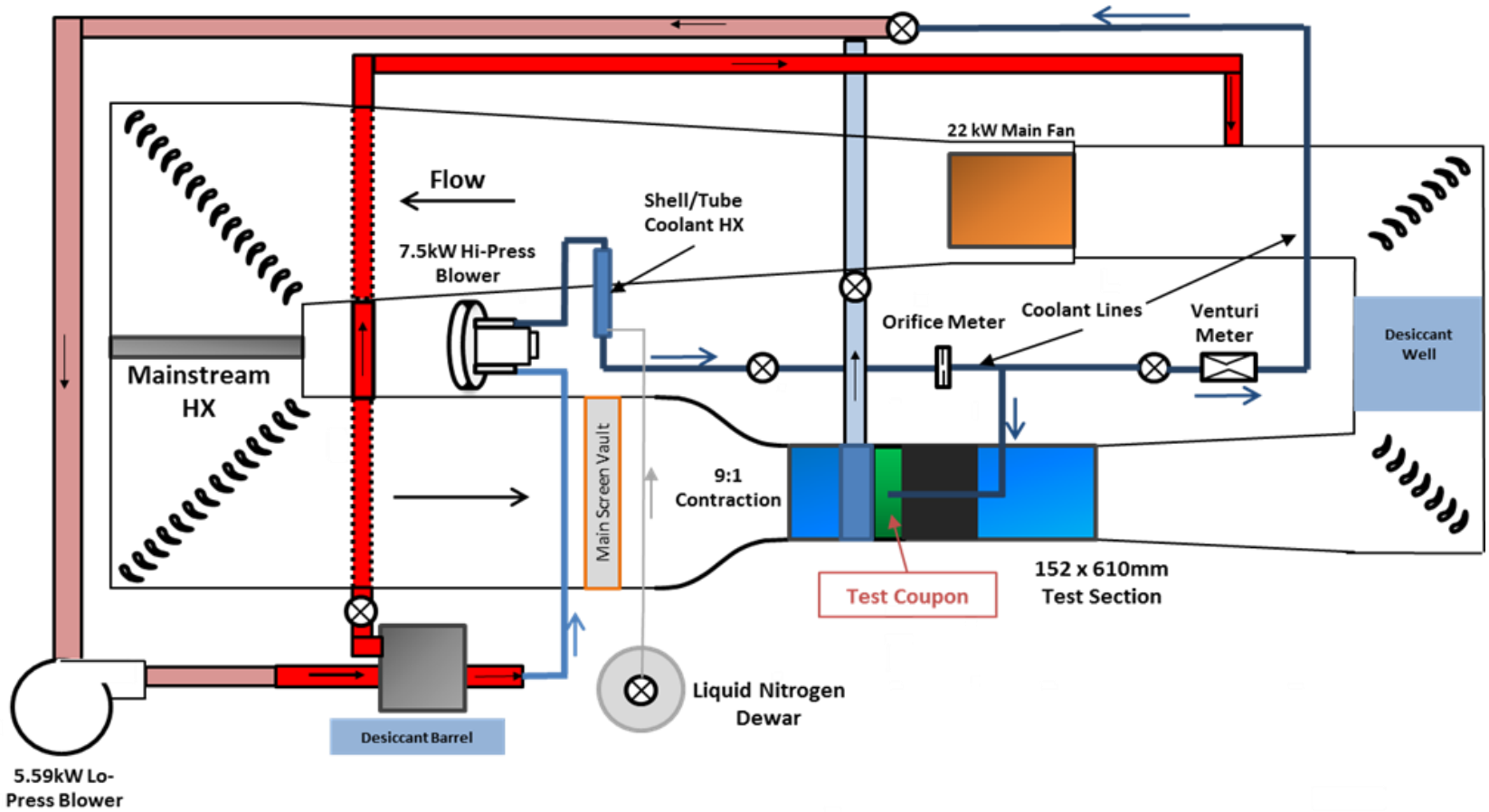

# Experiments will be conducted in a flat plate test section

| Inlet Area | 6” x 24” |
|---|---|
| $Ma_\infty$ | 0.04 – 0.15 |
| $Tu_\infty$ | 0.5 – 7.0 % |
| $\Lambda_x$ | 5 – 15 mm |
| $\delta_{99}$ | 5 -20 mm |

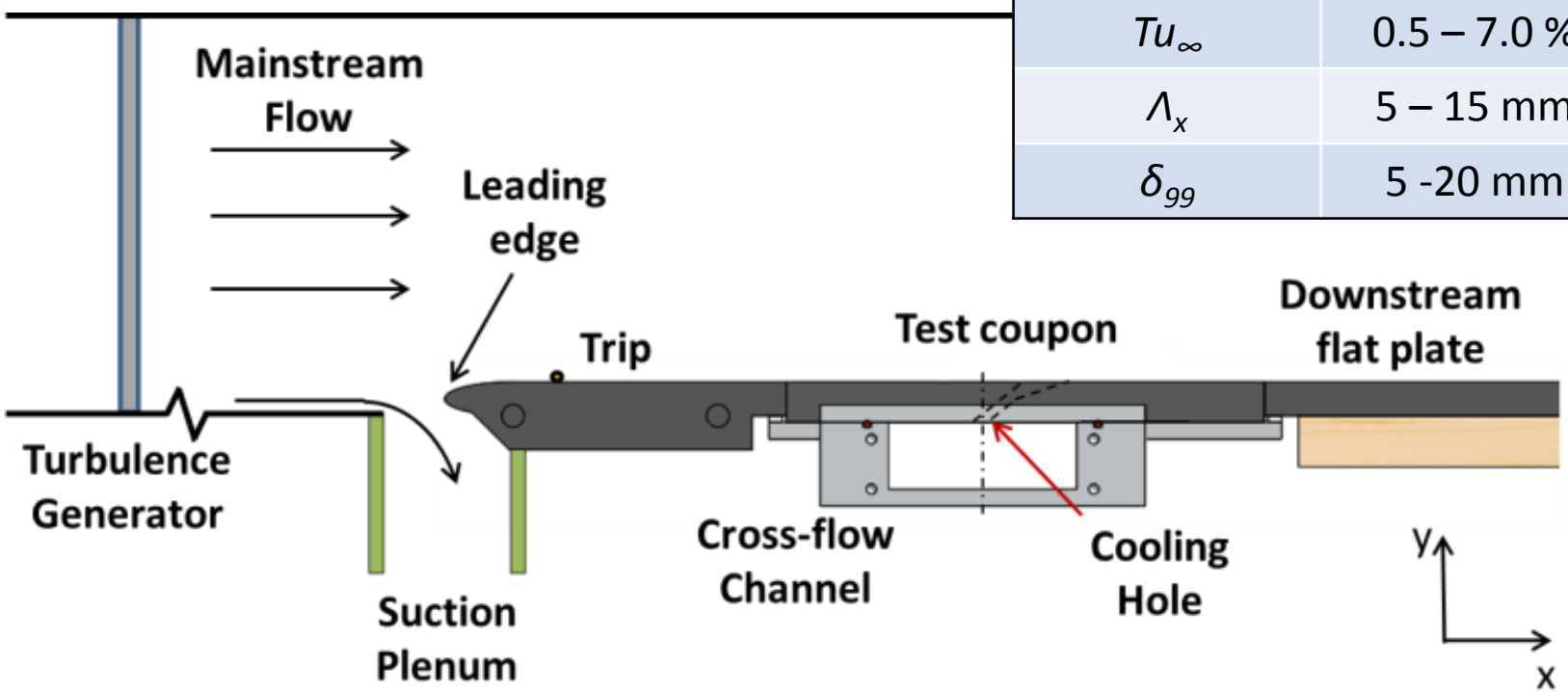

# A crossflow channel will be used to simulate internal crossflow

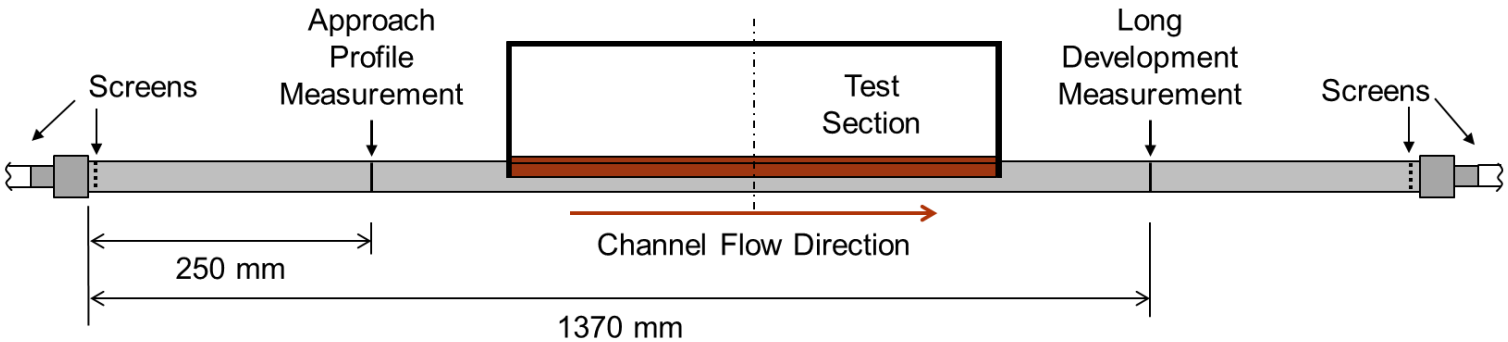


| | |
|---|---|
| $H_{ch}$ | 25 mm |
| $W_{ch}$ | 70 mm |
| $d_H$ | 37 mm |

Flow has been shown to be fully developed regardless of flow direction

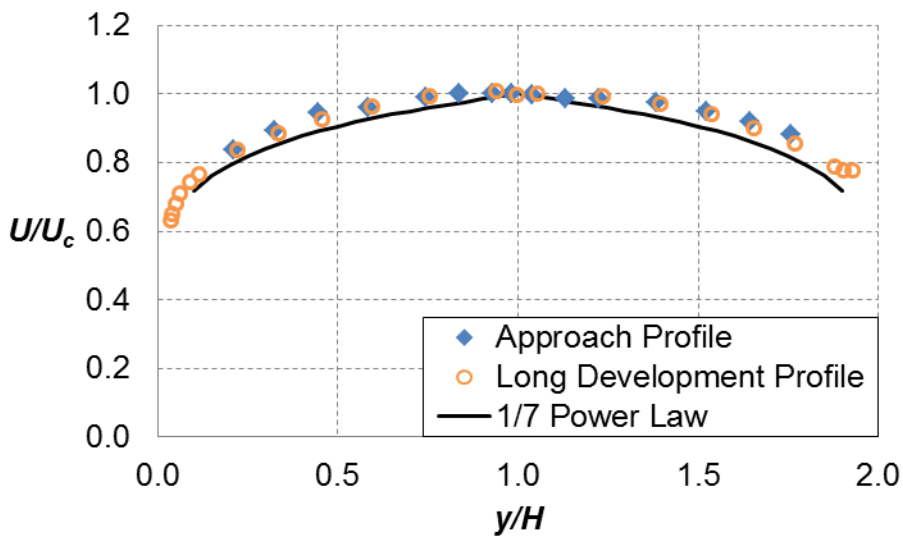

# The film cooling geometry will be a 7-7-7 axial, laidback fan-shaped hole

This is an open literature geometry introduced by Schroeder and Thole (2014)

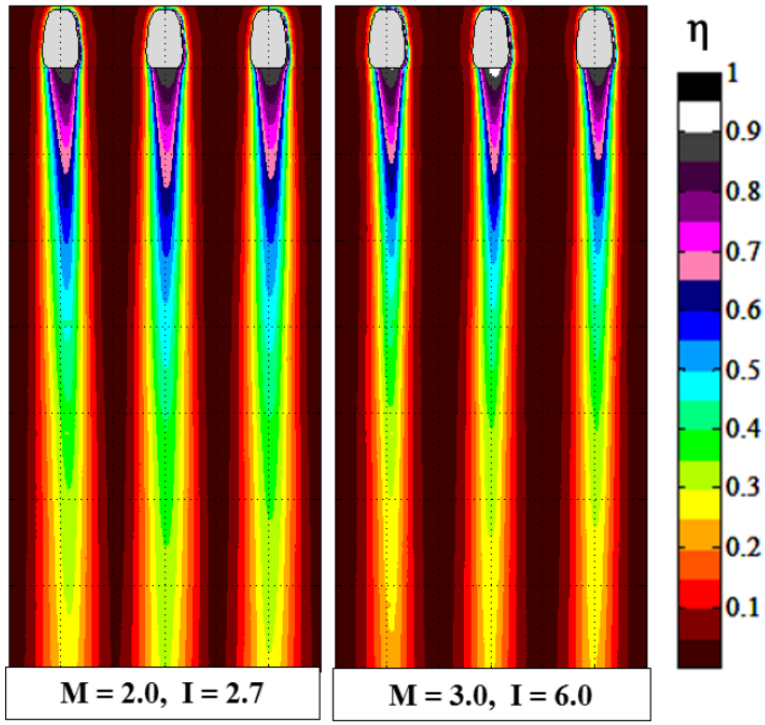


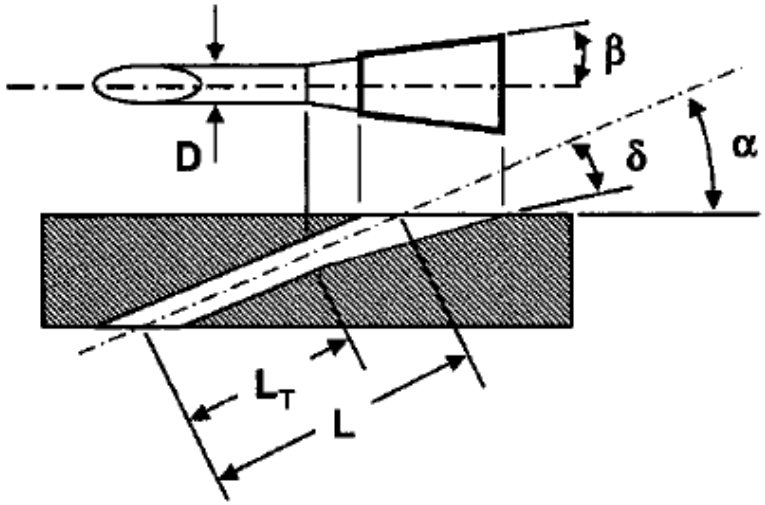


| | |
|---|---|
| $\alpha$ | 30° |
| $\beta$ | 7° |
| $\delta$ | 7° |
| $L/d$ | 6 |
| $L_T/d$ | 2.5 |

# IR thermography is used to measure adiabatic effectiveness and heat transfer augmentation

**Adiabatic Effectiveness:**

- Low conductivity foam coupon
- Conduction corrected using:
  $q" = h_f(T_{aw} - T_{meas})$

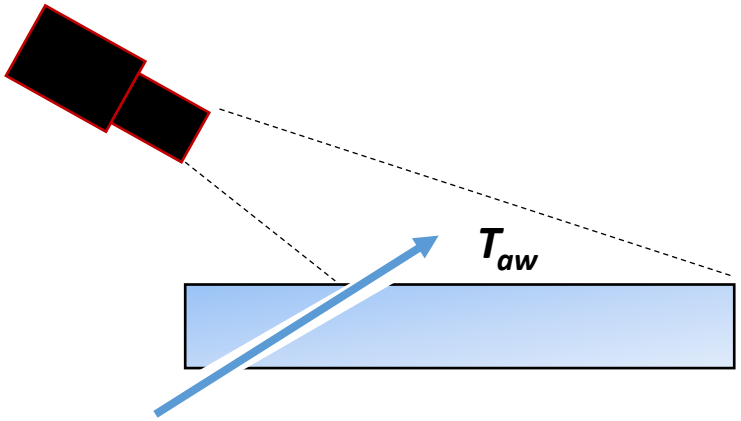


**Heat Transfer Augmentation:**

- Low conductivity foam coupon
- Thin heat flux foil
- Conduction corrected using:
  $q"_{conv} = q"_{meas} - q"_{cond}$

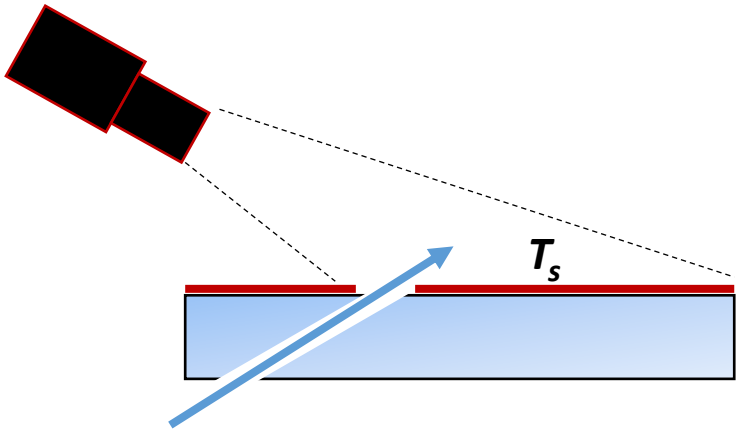

# Thermal Field Measurements will be made with a microthermocouple probe

Probe is made from 0.05 mm diameter Type E thermocouple wire

The wire is adhered to a repurposed hot film anemometry probe

An automated three-axis traverse with stated accuracy of ± 15 µm will be used to move the probe

The probe is calibrated to within ± 0.5 K

# Adiabatic effectiveness and thermal field measurements for compound angle round holes fed by internal crossflow

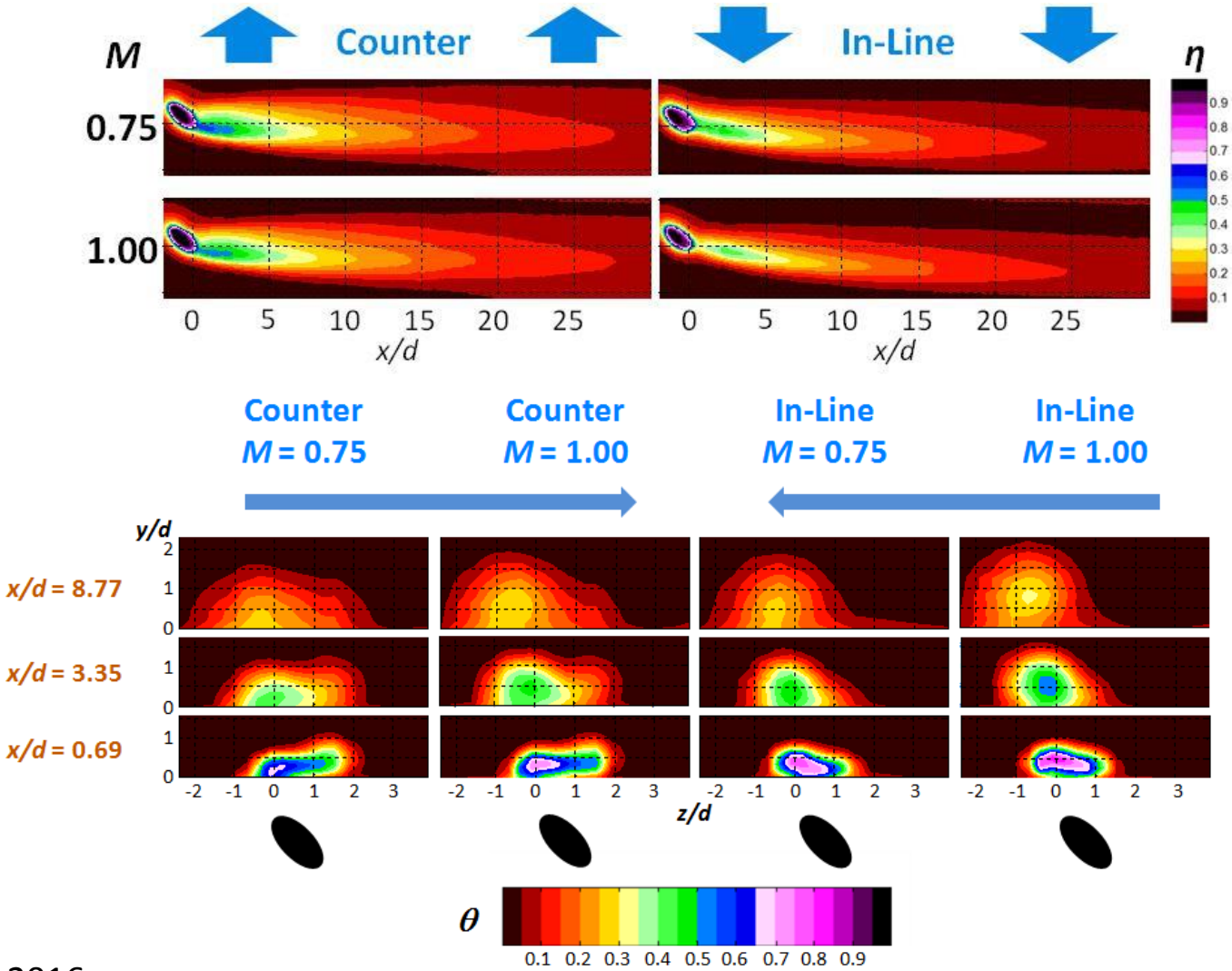

# Flow field measurements will be made using either PIV or LDV

Optical access will be provided though clear acrylic test section walls

Both mainstream and coolant flow will be seeded so as to minimize seeding bias

Seeding particles will need to be selected to work at low temperatures ($T \approx 200$ K)

Both systems are currently in hand and used for an experimental methods class

Litron Lasers PIV system with dual Nd: YAG lasers

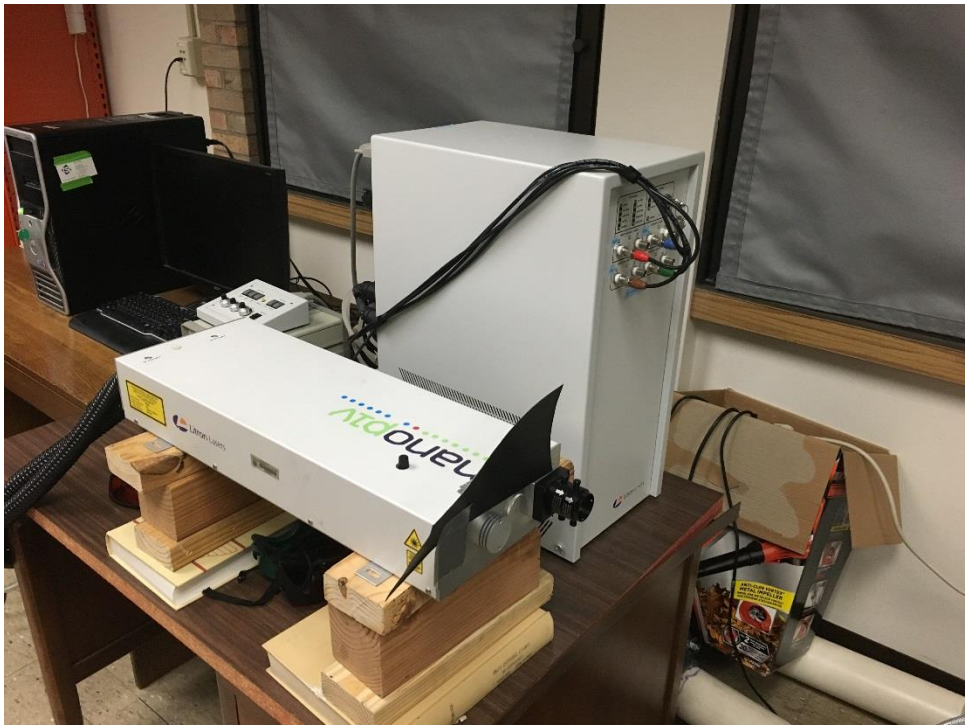

# Objective 1

Investigate a wide range of flow parameters to determine conditions of interest

# Internal crossflow velocity can have an effect on film cooling effectiveness

A study by Gritsch *et al* (2003) showed that the effect of increasing the internal crossflow velocity had mixed effects

This study made no effort to determine the parameter causing crossflow effects (i.e. $Re_{ch}$, $VR_{ch}$, $Ma_{ch}$)

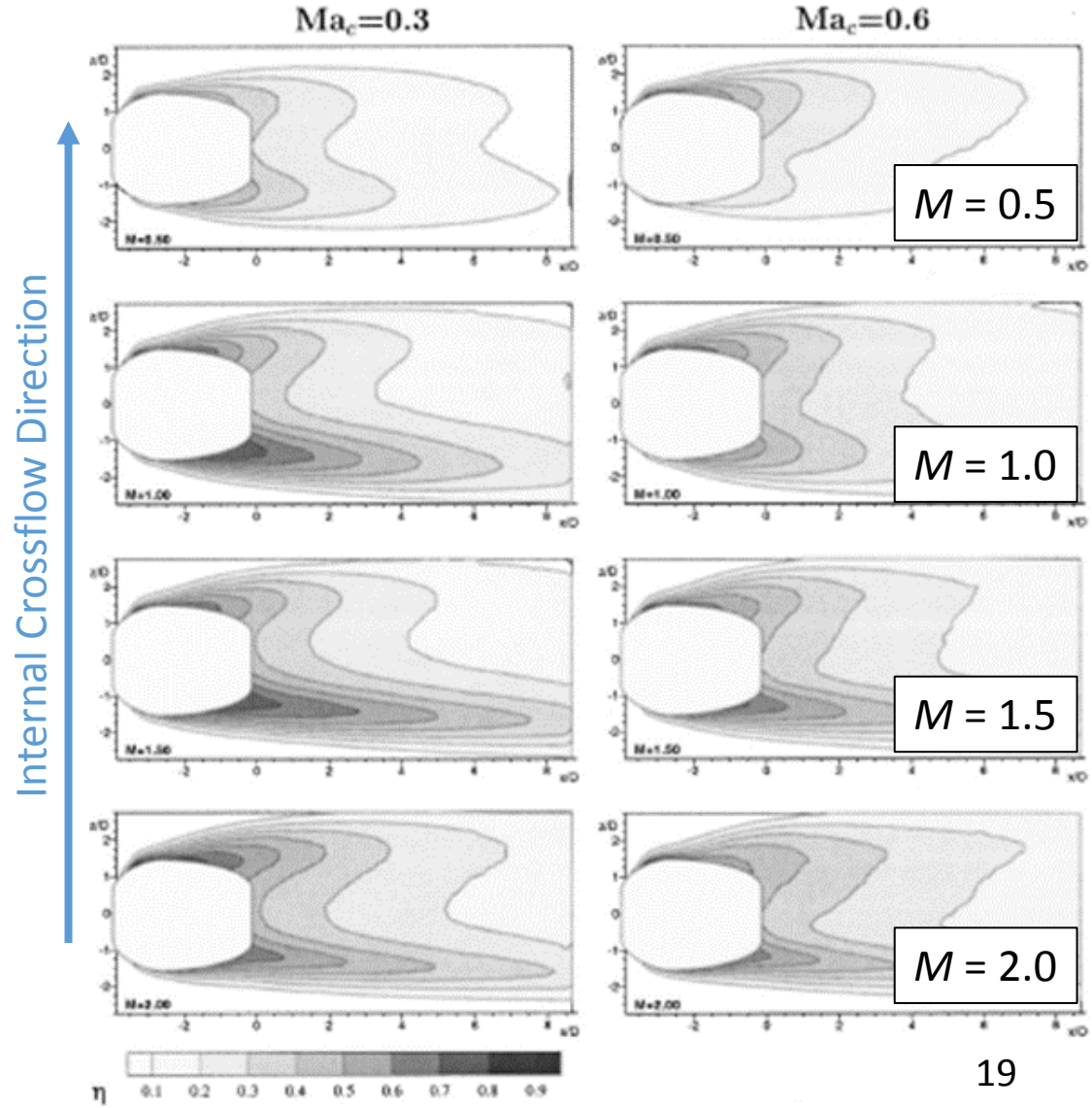

# The channel velocity ratio is likely an important internal flow parameter

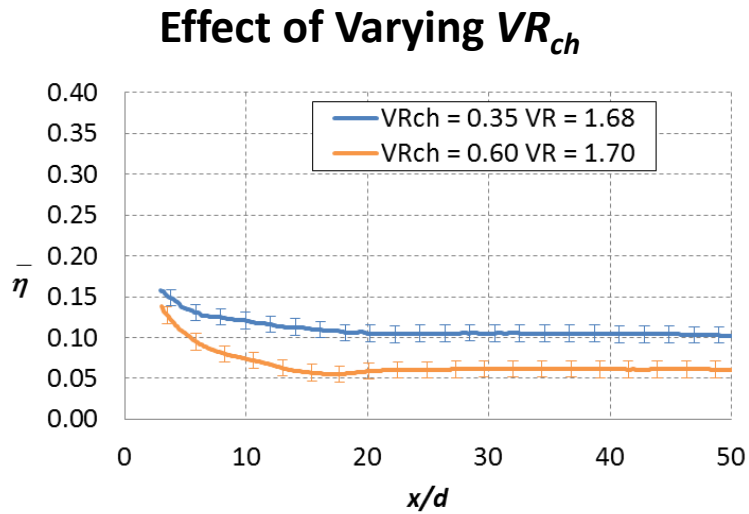


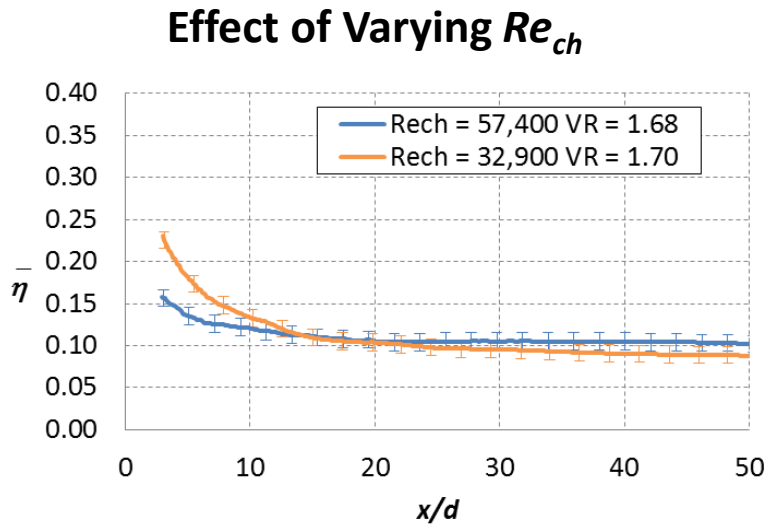


More recently, Wilkes *et al* (2016) showed that at low external *Ma*, adiabatic effectiveness of 7-7-7 holes scaled with internal velocity ratio, $VR_{ch} = U_{ch}/U_{\infty}$

# There is an effect of increasing external Reynolds number for plenum-fed shaped holes

Anderson *et al* (2016) found that film cooling effectiveness increased with increasing external Reynolds number, $Re_d$

$$\boldsymbol{Re_d \equiv \frac{\rho_\infty U_\infty d}{\mu_\infty}}$$

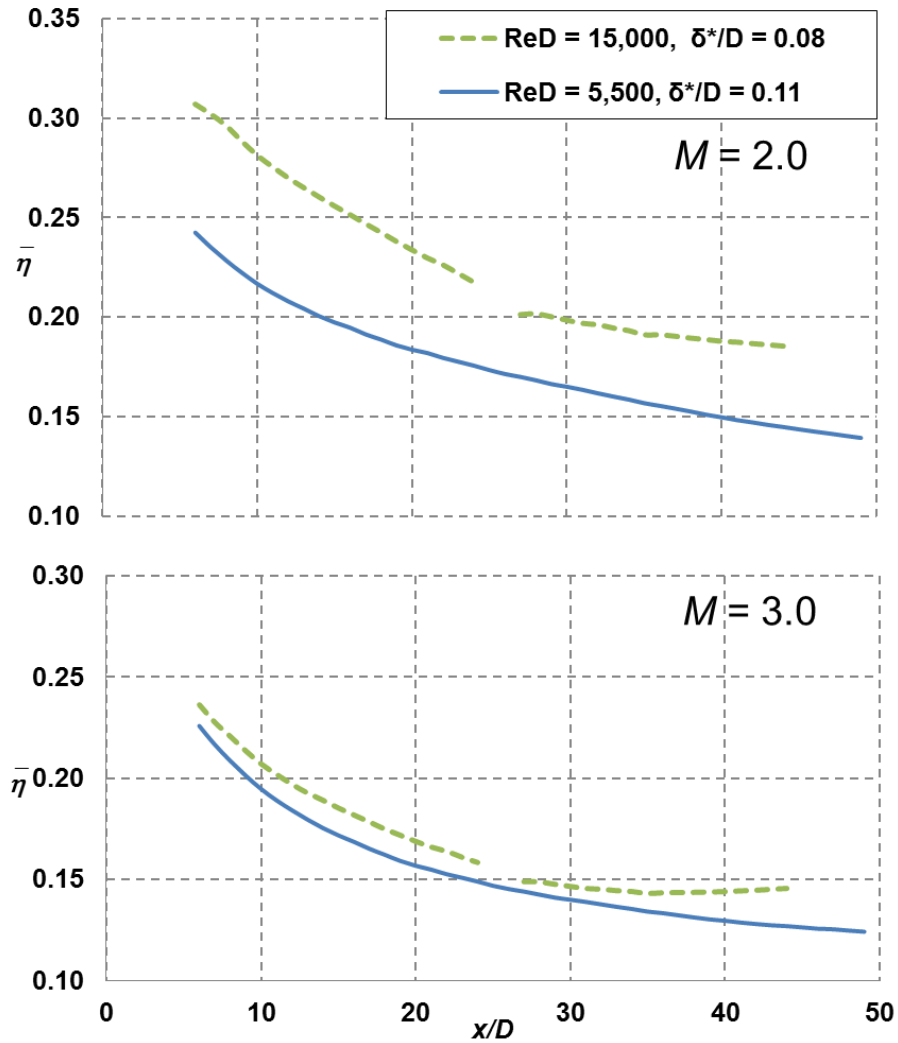

# The effect of varying internal velocity ratio and external Reynolds number will be investigated

| Parameter | Range |
|---|---|
| $Re_d$ | 4,000 – 12,000 |
| $VR_{ch}$ | 0.2 – 0.6 |
| $VR$ | 0.3 – 2.0 |
| $DR$ | 1.8 |

**Adiabatic effectiveness and heat transfer augmentation will be measured in the above parameter space**

**These data will demonstrate for the first time, the effect of $Re_d$ on effectiveness for crossflow-fed axial shaped holes**

**These data will also be used to determine conditions of interest for thermal and flow field studies**

# Objective 2

Determine how internal crossflow causes biasing of coolant within the diffuser

# For plenum-fed holes it has been shown that separation and jetting regions exist within the holes

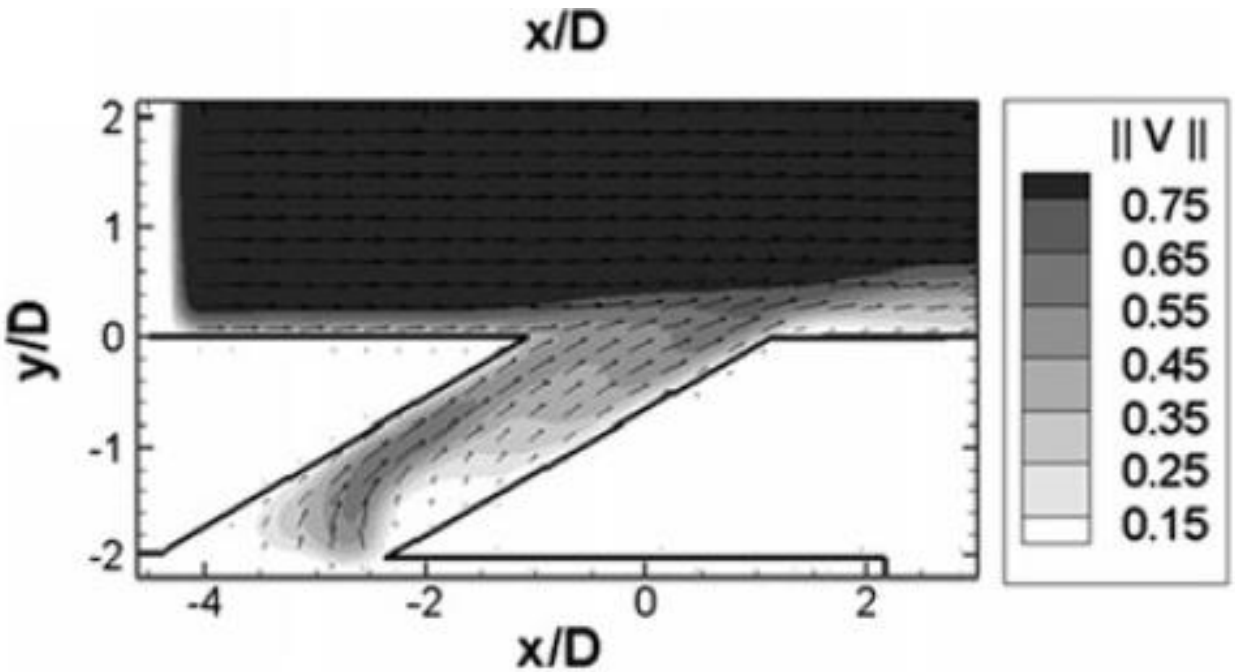


Figure is from Issakhanian *et al* (2012) for *VR* = 0.5

**A separation region forms at the downstream edge of the inlet**
**The majority of the coolant is accelerated around this separation region**

# Holes fed by crossflow have also been shown to have skewed hole inlet velocity profiles

Lloyd and Brown (1986) measured flow fields inside a pipe fed by a normal crossflow

It was shown that a skewed velocity profile resulted from the crossflow

Rotation of the peak velocity contour going downstream suggests a swirling motion in the pipe

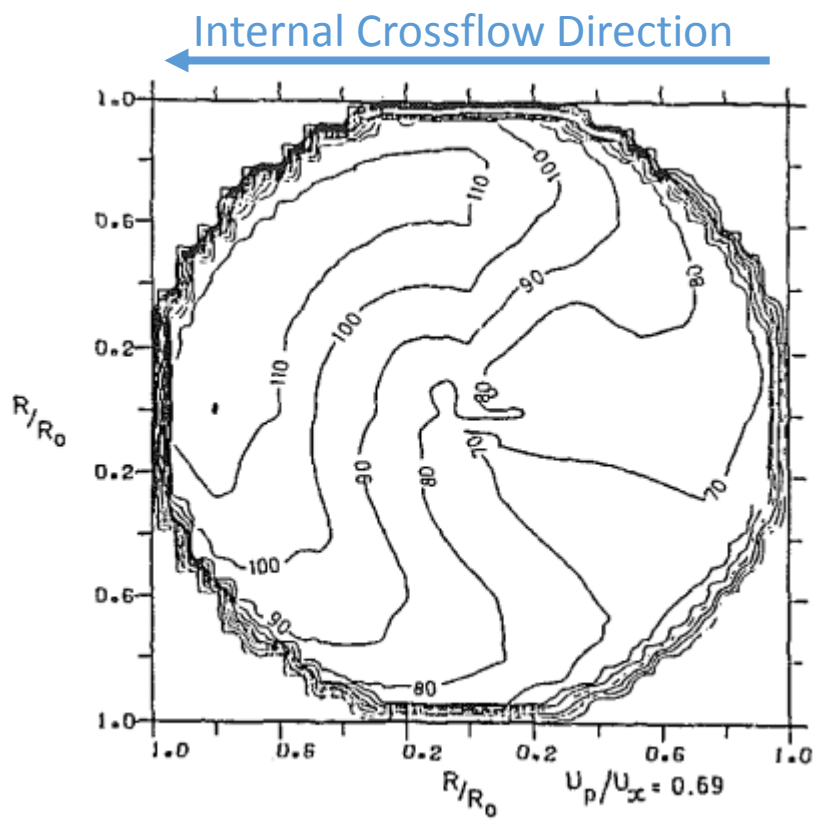


Velocity contours at $x/d$ = 4, $U_p/U_{ch}$ = 0.69

# Two studies have observed that there is a biasing in the diffuser due to crossflow

14-14-15 holes at $Ma_{ch}$ = 0.3, $Ma_{\infty}$ = 0.3

7-7-7 holes at $VR_{ch}$ = 0.4, $Ma_{ch}$ < 0.04

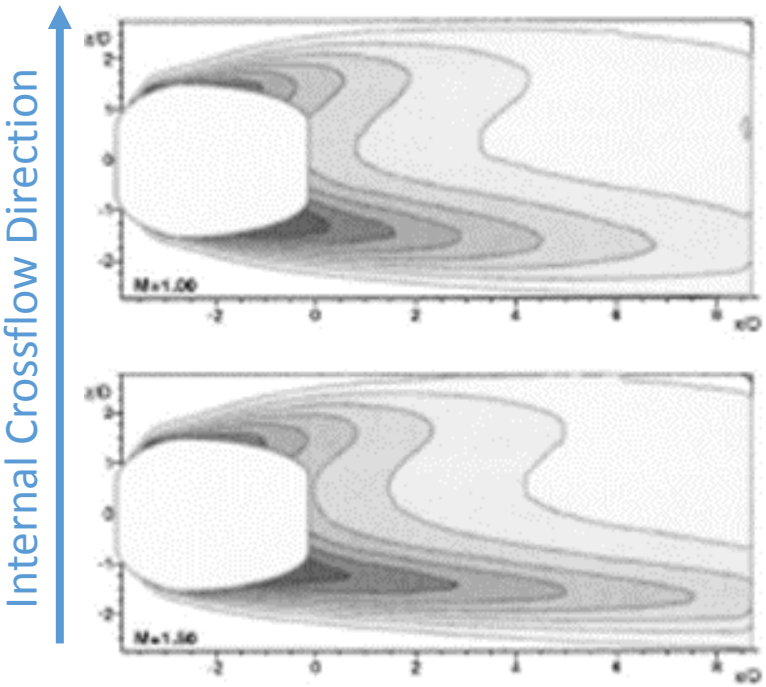


Figure is from Gritsch *et al* (2003)

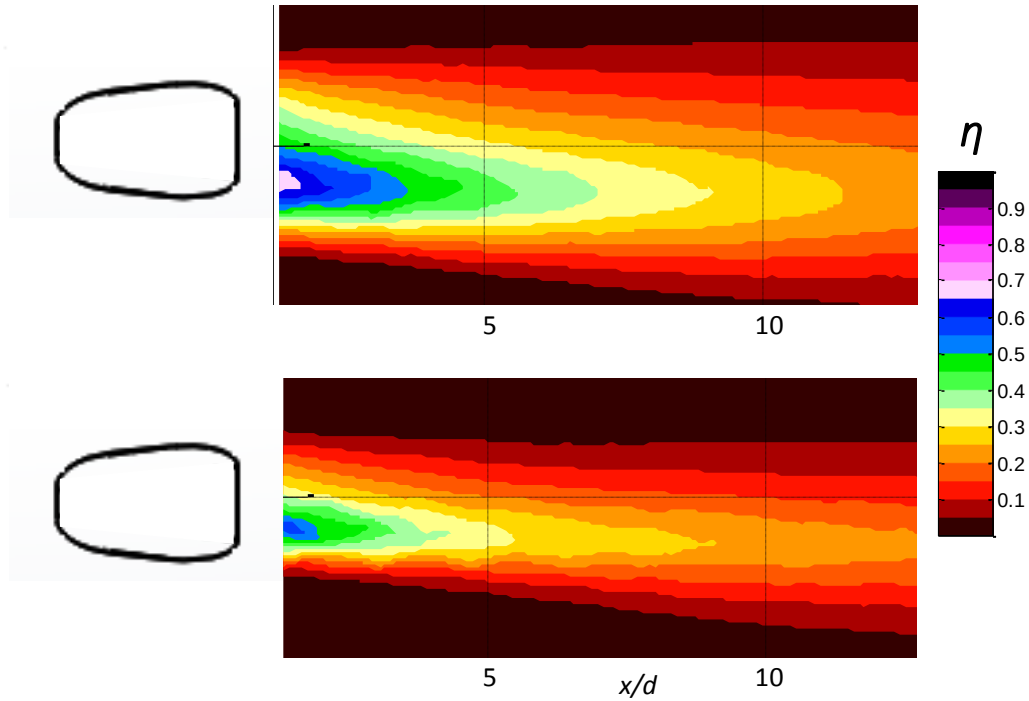


Data is from Wilkes *et al* (2016)

The coolant jet tends to bias towards the windward side of the hole for laidback fan-shaped holes

# Flow visualization will be used to study flow structures within the diffuser

There exists no clear explanation for why jets bias the way they do in the diffuser for laidback fan-shaped holes. A flow visualization study will be performed to gain further insight into the flow physics in the diffuser

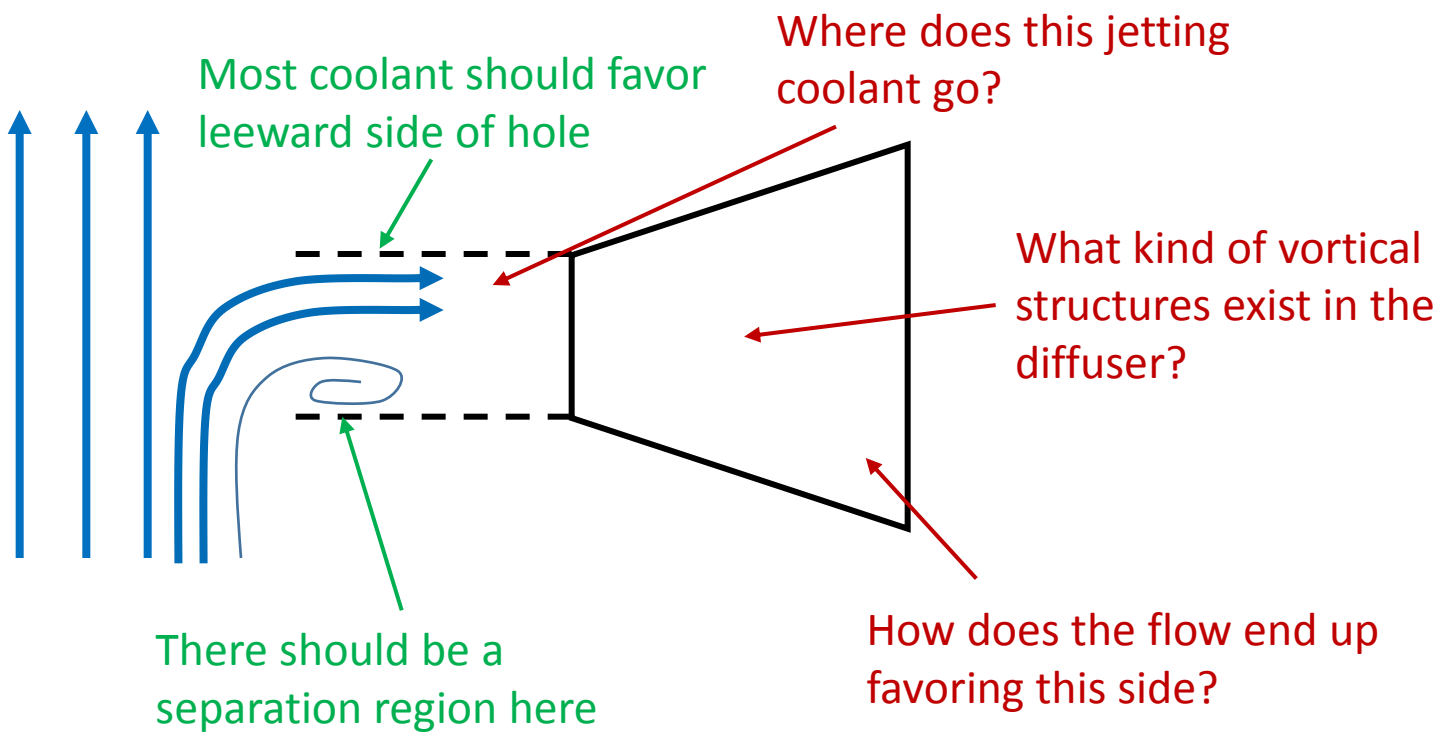

# Objective 3

Determine the extent of and study the mechanisms that cause ingestion into the film cooling hole

# Previous studies have indicated there is ingestion into the diffuser of laidback fan-shaped holes

**Centerline *y*-velocity contours in the *x*-*y* plane from Giebert *et al* (1997)**

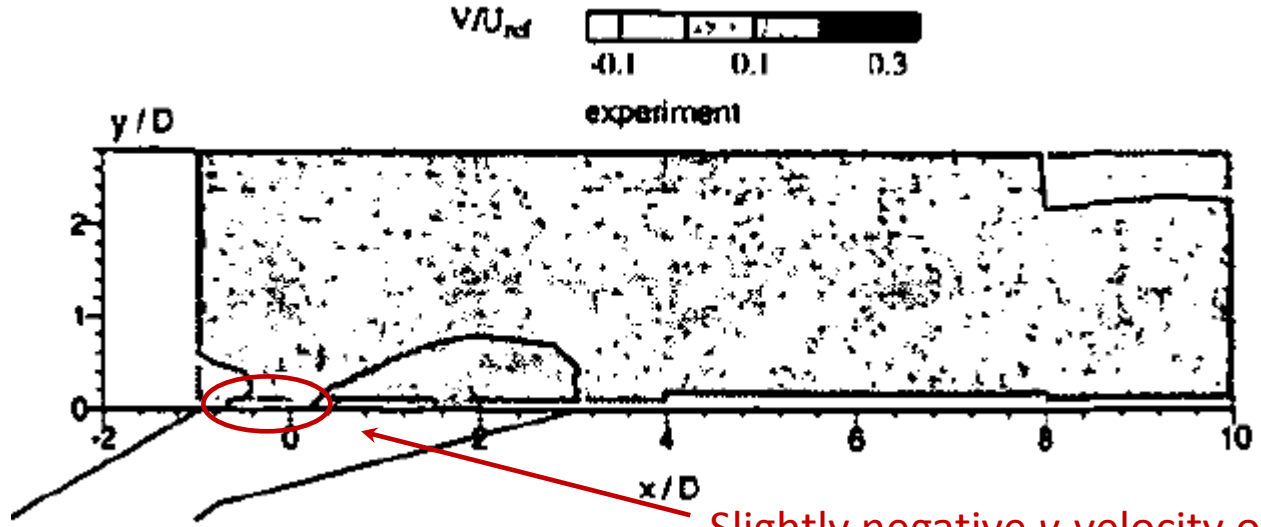


Fed by internal coflow

Slightly negative *y*-velocity observed above the upstream edge of the hole

This same result was observed for the same configuration by Thole *et al* (1998)

# Thermal field measurements have also suggested that laidback fan-shaped holes experience ingestion

**Coolant from round holes exits at $\theta \approx 1.0$**

**Coolant from shaped holes exits at $\theta \approx 0.7$**

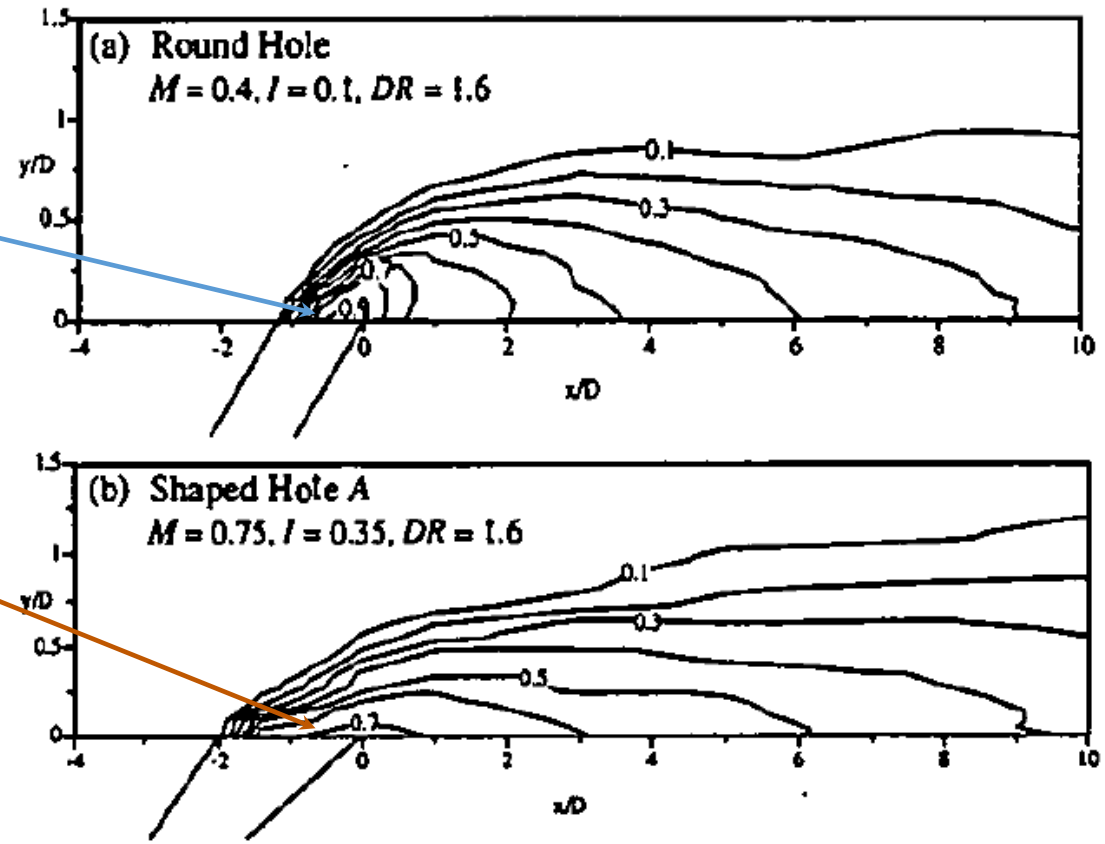


Figure is from Kohli and Bogard (1999)

# A computational study predicted that crossflow and metering length had an effect on ingestion

Crossflow caused increased ingestion relative to a plenum

Increasing metering length led to increased ingestion

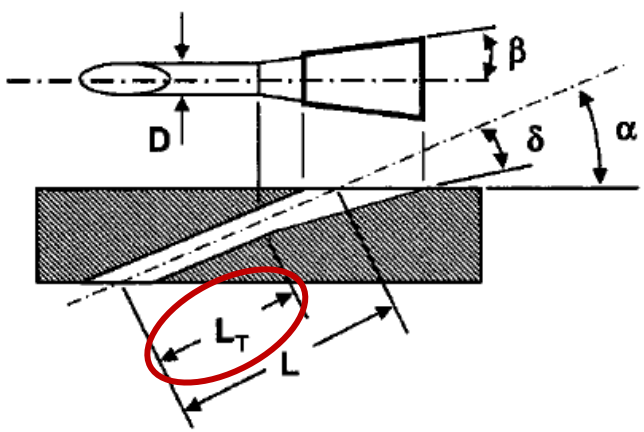


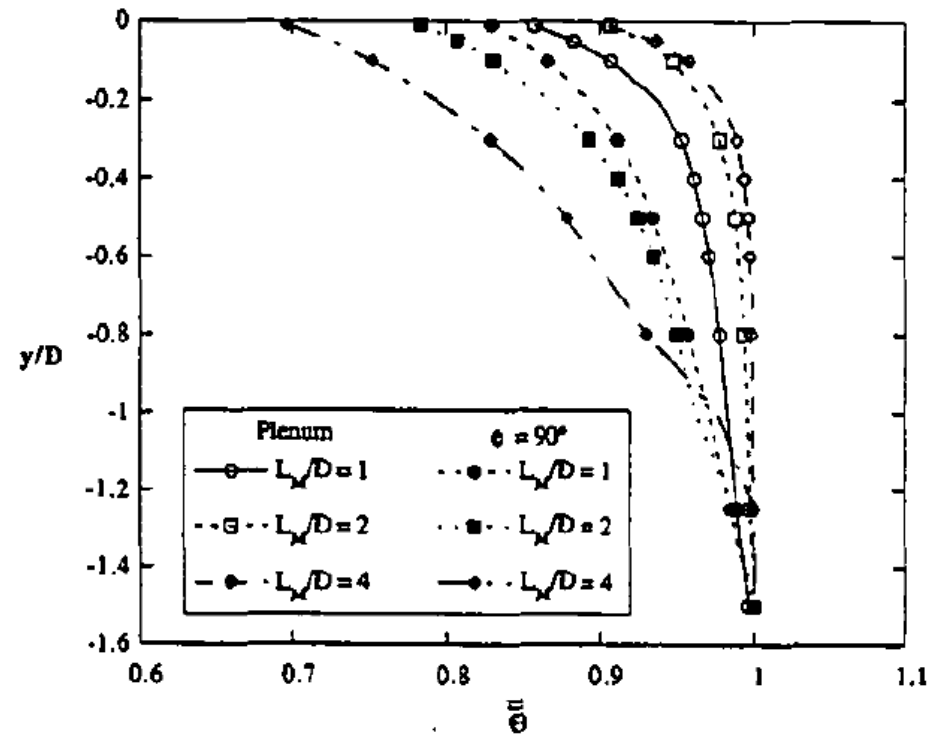


Fig. 6c Ingestion within the film-cooling hole as a function of metering length for M = 2 and Re = 30,000.

Figure is from Kohli and Thole (1998)

# The location and extent of ingestion for shaped holes fed by crossflow will be measured

Laser Doppler Velocimetry (LDV) will be used to measure *x* and *y*-velocity over the hole exit plane to determine the location of ingestion

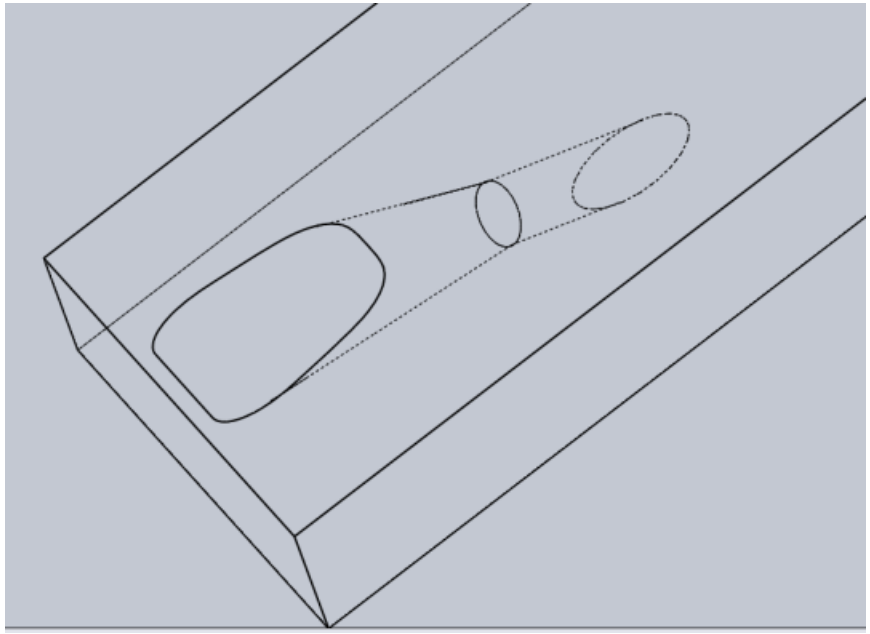

A micro-thermocouple probe ($d_{probe}$ = 0.05 mm ≈ 0.01$d_{hole}$) will be used to measure temperature in the diffuser to determine the extent of ingestion

**This will be the first experimental study to examine ingestion in this manner**

# Objective 4

Study the nature and formation of vortical structures that affect the spread of coolant

# Vortical structures for cylindrical film cooling jets are well understood

**Low Injection Flow Rate**

**High Injection Flow Rate**

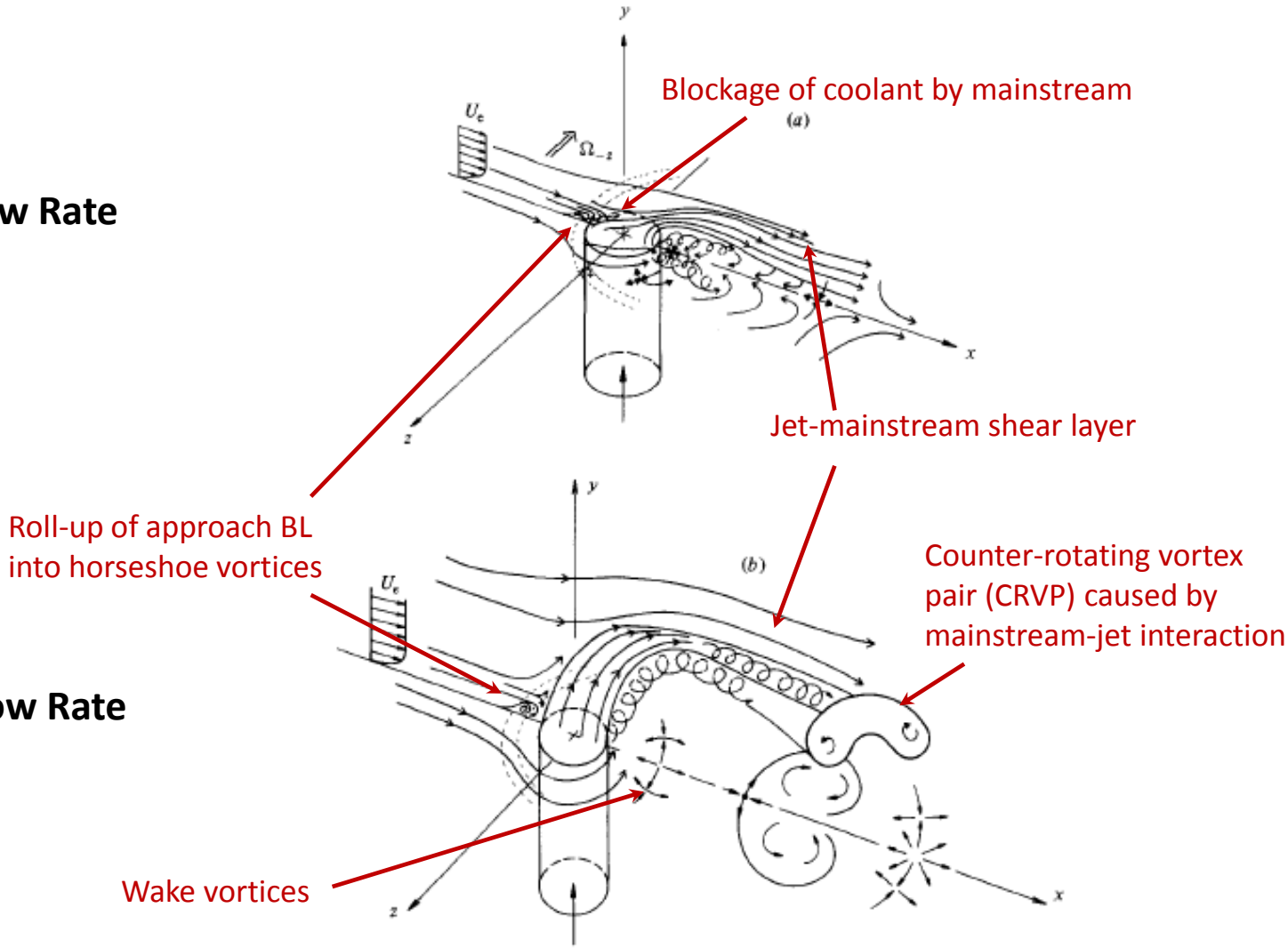


Figure is from Andreopoulos and Rodi (1984)

# Similar flow structures have been observed for shaped holes

Contours of mean stream-wise velocity overlaid with mean secondary flow vectors

The 7-7-7 shaped hole also features a CRVP that was stronger with increased blowing ratio

*These measurements were made with a PIV system similar to the one to be used in this study*

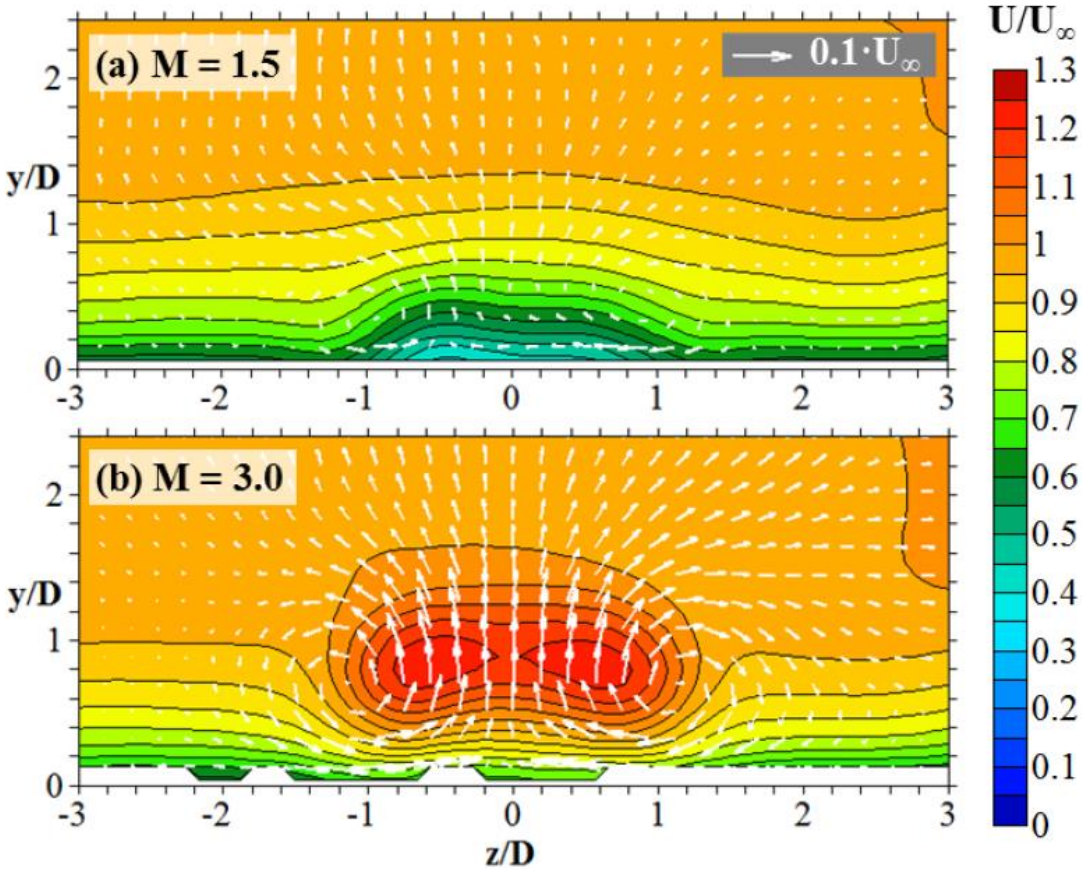


Figure is from Schroeder and Thole (2015)

# The only investigations of flow structures for cross-flow fed holes have been computational

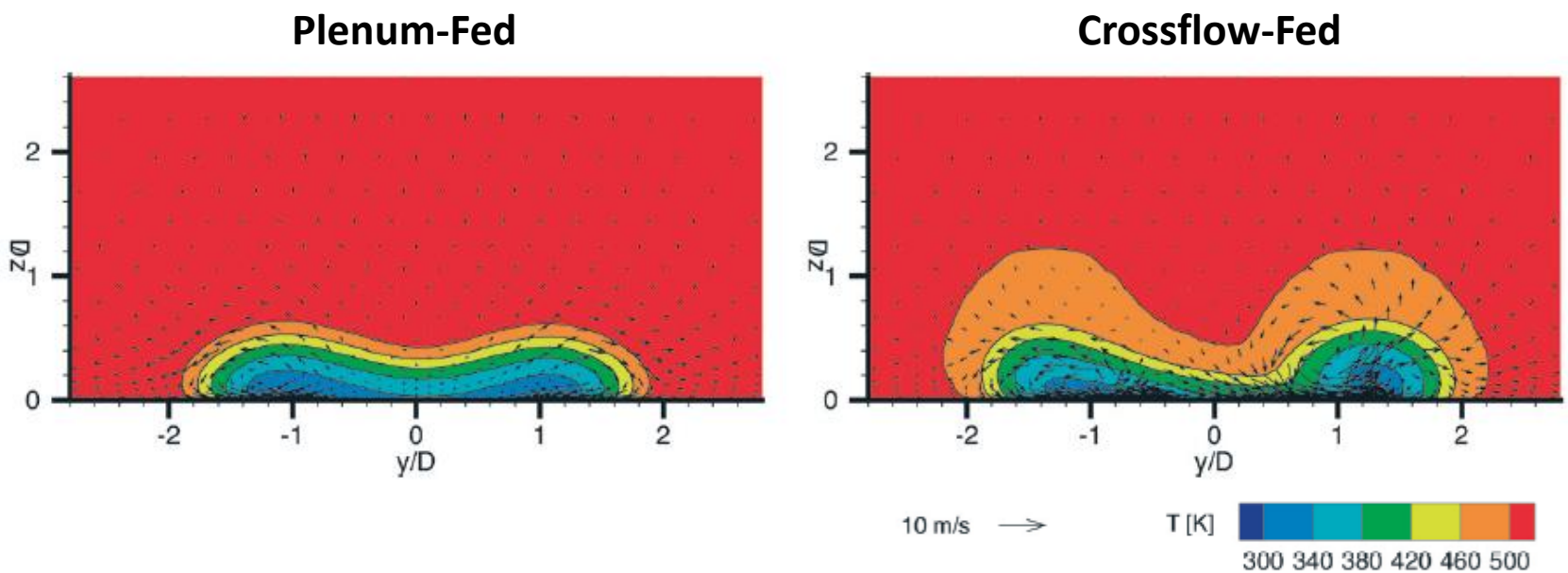


Figure is from Saumweber and Schulz (2008)

The crossflow-fed holes had a co-rotating vortex pair that enhanced the spread of coolant away from the surface

# The nature and formation of the jet flow structures will be investigated

PIV and thermal field measurements will be made in *y-z* and *x-y* planes

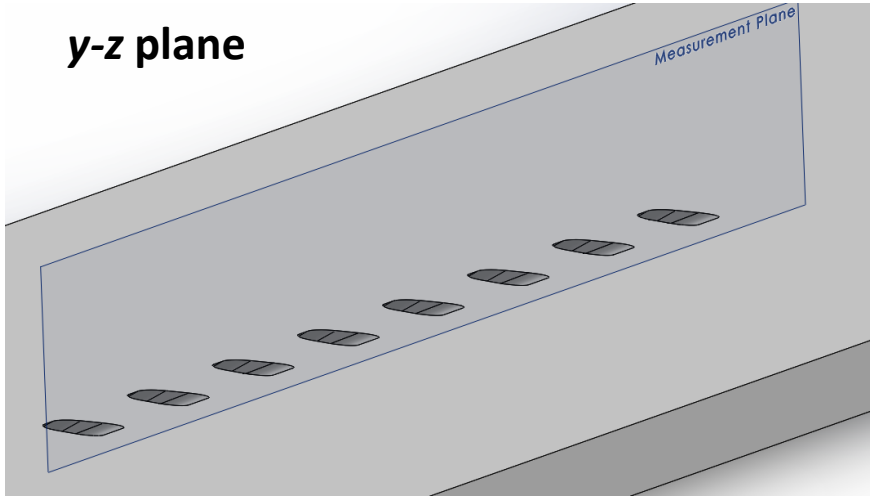


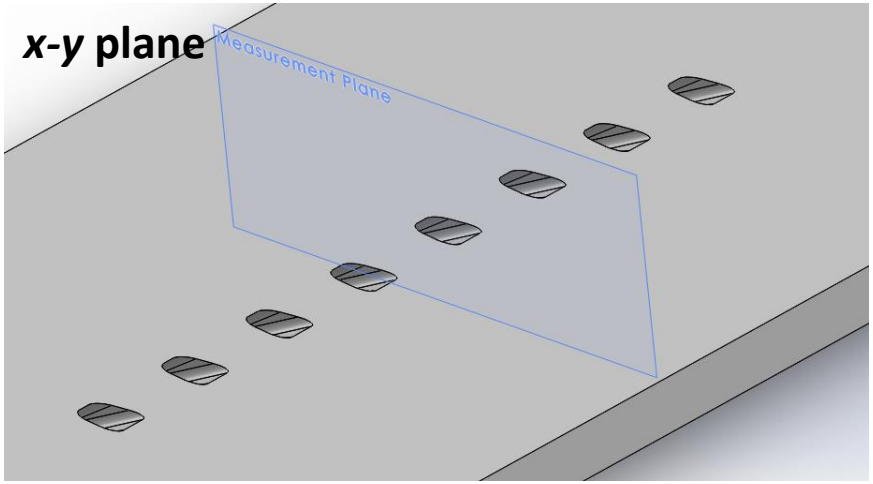


- Measure vortical flows in jets
- Gain insight into how these vortices form
- Measure spread of coolant due to vortices

- Measure shear layer turbulence
- Gain insight into jet detachment
- Measure spread of coolant due to detachment/shear layers

**This will be the first experimental study investigating flow fields downstream of shaped holes fed by an internal crossflow**

# Objective 5

Develop an understanding of how internal crossflow velocity and the injection rate contribute to the hole entrance effect

# As discussed previously, hole entrance effects are important to performance of film cooling holes

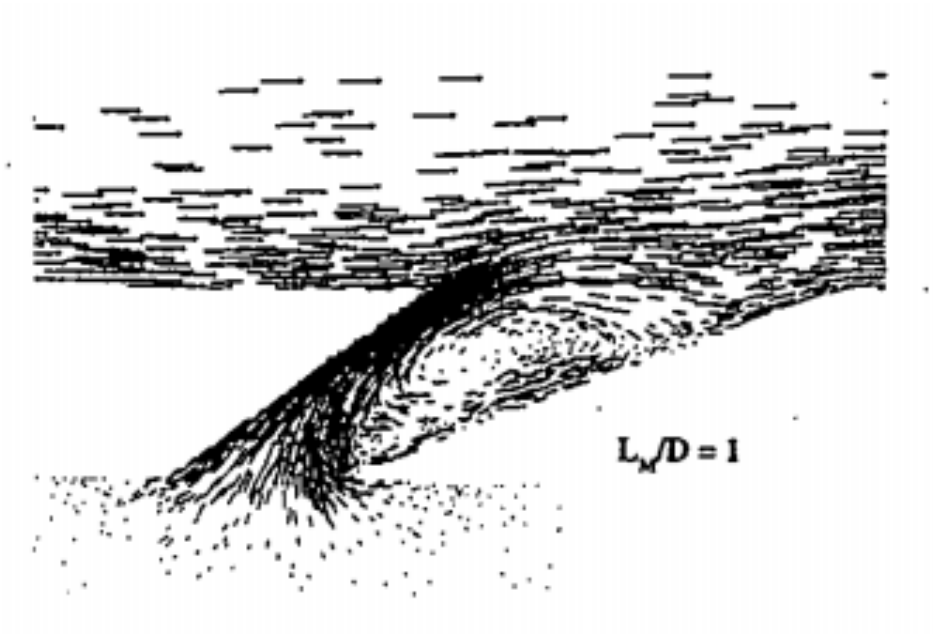


Figure is from Kohli and Thole (1998)

However, measurements inside the hole entrance would be incredibly difficult to make

# An analysis of how the coolant turns into the hole could provide useful insight into hole exit flow structures

PIV measurements will be made in the *y-z* plane inside the channel

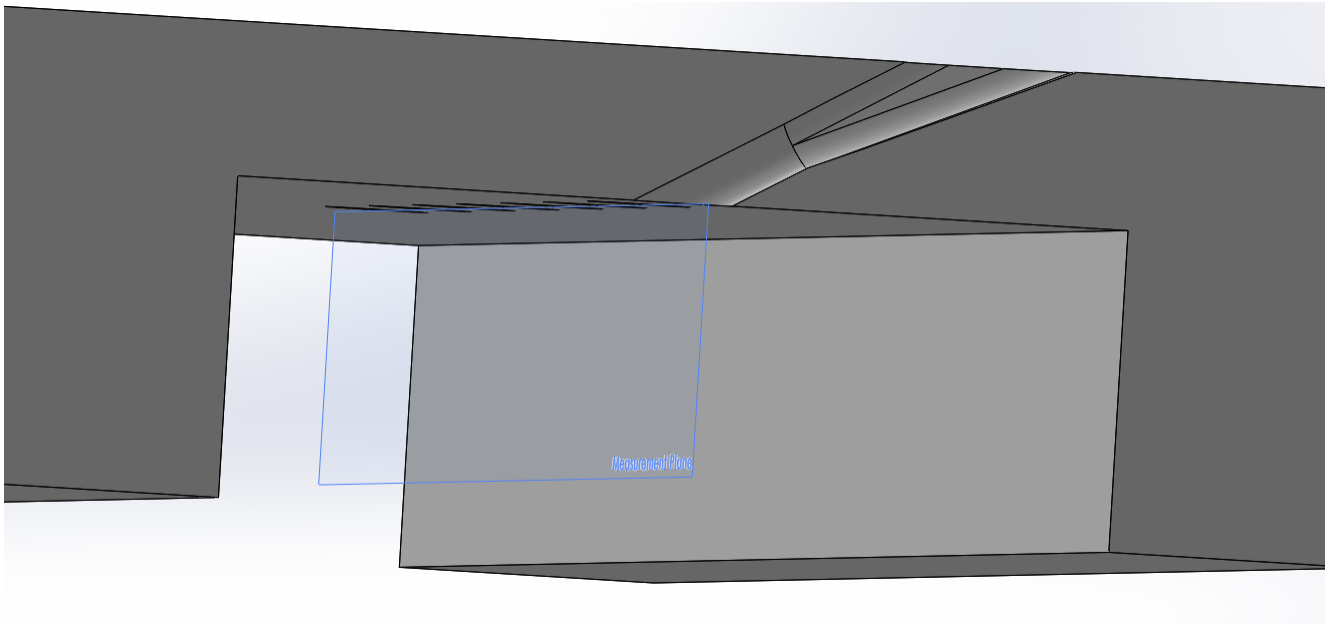


These measurements will show how the flow turns into the film cooling holes at different internal velocity ratios and film injection rates

# Computational Collaboration

Our laboratory is currently collaborating with a computational effort led by Dr. Bob Moser and Todd Oliver.

The goal of this computational effort is to use DNS to gain better insight into in-hole flow physics and to develop better models for LES and other less computationally expensive models

This proposed study will benefit from insights provided by the DNS study

It will also provide valuable data for validation of future computational work

# Projected Completion of Tasks

| Task | Estimated Completion |
|---|---|
| Design and construction of test coupons | March 2016 |
| Adiabatic effectiveness experiments | May 2016 |
| Heat transfer augmentation experiments | July 2016 |
| Flow visualization experiments | September 2016 |
| Thermal field experiments | October 2016 |
| External PIV experiments | December 2016 |
| External LDV experiments | January 2017 |
| Internal PIV experiments | March 2017 |
| Graduation | May 2017 |

# List of Courses Completed

| Course Number | Completed For | Course Name/Description |
|---|---|---|
| ME 381P | Masters | Fundamentals of Incompressible Flow |
| ME 381Q | Masters | Thermodynamics |
| ME 382P | Masters | Advanced Experimental Methods in Thermal/Fluid Systems |
| ME 381R | Masters | Fundamentals of Heat and Mass Transfer |
| ME 381R | Masters | Radiation in Participating Media |
| ME 381P | Masters | Compressible Flow and Turbomachinery |
| PGE 381K | Masters | Engineering Analysis |
| ME 381P | Masters | Dynamics of Turbulent Flow |
| ME 381R | Ph.D. | Radiation Heat Transfer |
| ASE 382Q | Ph.D. | Advanced Problems in Compressible Flow |
| ME 382N | Ph.D. | Computational Methods in Thermal/Fluid Systems |
| ME 381R | Ph.D. | Advanced Convection Heat and Mass Transfer |
| ME 382Q | Ph.D. | Energy Technology and Policy **(IN PROGRESS)** |
| **TBD** | **Ph.D.** | **One more course required** |

# Discussion and Questions

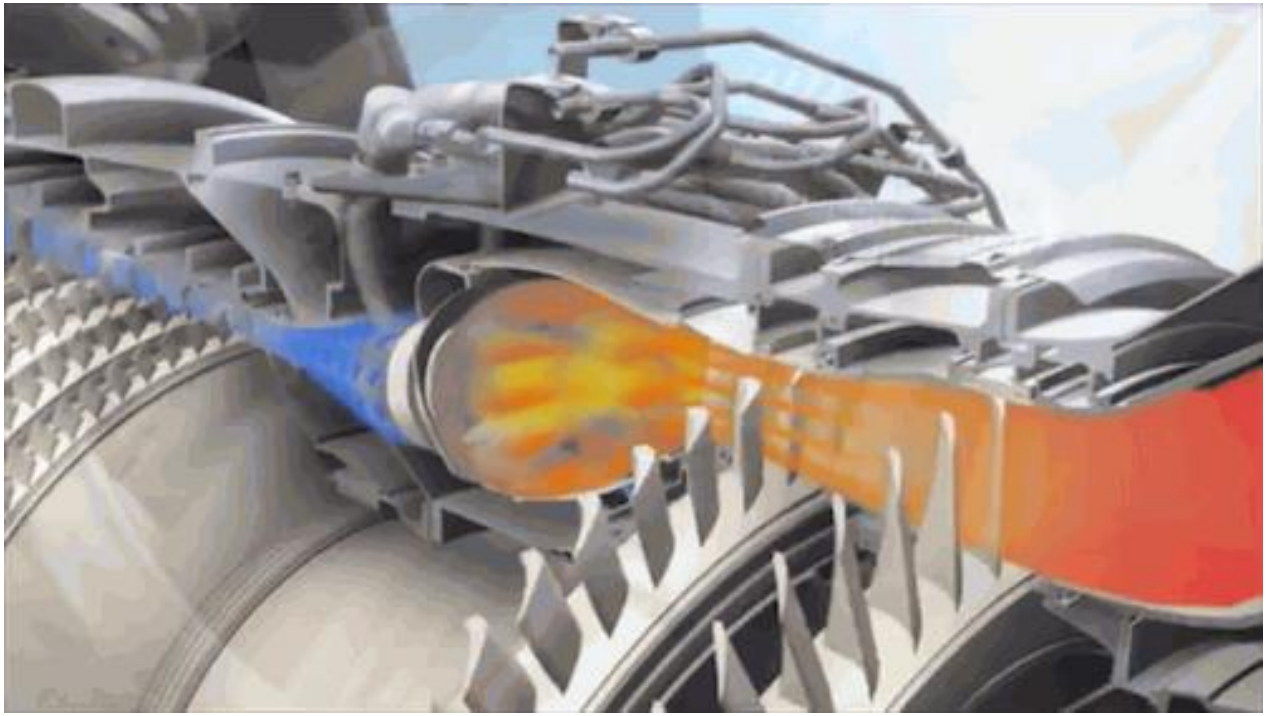

Image from: “World’s First Plant to Print Jet Engine Nozzles in Mass Production,” GE Report, 2014

# References


Adami, P., Martelli, F., Montomoli, F., and Saumweber, C., 2002, "Numerical Investigation of Internal Crossflow Film Cooling," ASME Paper No. GT-2002-30171.

Anderson, J. B., Wilkes, E. K., McClintic, J. W., and Bogard, D. G., "Effects of Freestream Mach Number, Reynolds Number, and Boundary Layer Thickness on Film Cooling Effectiveness of Shaped Holes," ASME Paper No. GT2016-56152.

Andreopoulos, J. and Rodi, W., 1984, "Experimental Investigation of Jets in a Crossflow," *J. Fluid Mech.*, **138**, pp. 93-127.

Bogard, D. G. and Thole, K. A., 2006, "Gas Turbine Film Cooling," J. Propulsion and Power, **22**(2), pp. 249-270.

Bunker, R. S., 2005, "A Review of Shaped Hole Turbine Film-Cooling Technology," J. Heat Transfer, 127, pp. 441-453.

Dyson, T. E., Bogard, D. G., and Bradshaw, S. D., 2012, "Evaluation of CFD Simulations of Film Cooling Performance on a Turbine Vane Including Conjugate Heat Transfer Effects," ASME Paper No. GT2012-69107.

Giebert, D., Gritsch, M., Schulz, A., and Wittig, S., 1997, "Film-Cooling from Holes with Expanded Exits: A Comparison of Computational Results with Experiments," ASME Paper No. 97-GT-163.

Gritsch, M., Schulz, A., and Wittig, S., 2003, "Effect of Internal Coolant Crossflow on the Effectiveness of Shaped Film-Cooling Holes," *J. Turbomach*., **125**, pp. 547-554.

Issakhanian, E., Elkins, C. J., and Eaton, J. K., "In-hole and Mainflow Velocity Measurements of Low-Momentum Jets in Crossflow Emanating from Short Holes," *J. Exp. Fluids,* **53**, pp. 1765-1778.

Han J. C, Dutta, S., and Ekkad, S. V, 2000, *Gas Turbine Heat Transfer and Cooling Technology*, 1st ed. New York, USA: Taylor & Francis.

Kohli, A. and Bogard, D. G., 1999, "Effect of Hole Shape on Film Cooling with Large Angle Injection," ASME Paper No. 99-GT-165.

# References


Kohli, A. and Thole, K. A., 1998, “Entrance Effects of Diffused Film-Cooling Holes,” ASME Paper No. 98-GT-402.

Lloyd, S. and Brown, A., 1986, “Velocity and Turbulence Fields in Pipe Entrance Regions in the Presence of Cross Flows,” *J. Eng. Gas Turbines and Power*, **108**, pp. 498-503.

Peterson, S. D. and Plesniak, M. W., 2004, “Evolution of Jets Emanating from Short Holes into Crossflow,” *J. Fluid Mech*., **503**, pp. 57-91.

Saumweber, C. and Schulz, A., 2008, “Comparison of the Cooling Performance of Cylindrical and Fan-Shaped Cooling Holes with Special Emphasis on the Effect of Internal Coolant Cross-Flow,” ASME Paper No. GT2008-51036.

Schroeder, R. P. and Thole, K. A., 2014, “Adiabatic Effectiveness Measurements for a Baseline Shaped Film Cooling Hole,” ASME Paper No. GT2014-25992.

Schroeder, R. P. and Thole, K. A., 2015, “Effect of High Freestream Turbulence on Flowfields of Shaped Film Cooling Holes,” ASME Paper No. GT2015-43339.

Stewart, W. R., and Bogard, D. G., 2014, “Experimental Thermal Field Measurements of Film Cooling Above the Suction Surface of a Turbine Vane,” ASME Paper No. GT2014-27111.

Thole, K. A., Sinha, A. K., Bogard, D. G., and Crawford, M. E., 1992, “Mean Temperature Measurements of Jets with a Crossflow for Gas Turbine Film Cooling Application,” *Rotating Machinery Transport Phenomena*, J. H. Kim and W. J. Yang, eds., Hemisphere Pub. Corp., New York.

Thole, K. A., Gritsch, M., Schulz, A., and Wittig, S., 1998, “Flowfield Measurements for Film-Cooling Holes with Expanded Exits,” J. Turbomach., **120**, pp. 327-336.

Wilkes, E. K., Anderson, J. B., McClintic, J. W., and Bogard, D. G., 2016, “An Investigation of Turbine Film Cooling Effectiveness with Shaped Holes and Internal Cross-Flow with Varying Operational Parameters,” ASME Paper No. GT2016-56162.